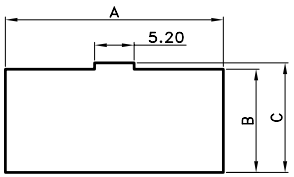

Poles	Dimensions		
	A	B	C
02	15.00	6.00	6.85
03	19.70		
04	24.20		
2x2	15.60	10.60	11.60
06	19.70	10.20	11.10
09	19.70	14.80	15.70
12	24.20		
15	28.70		

■ SPECIFICATIONS

- Current Rating :
  1. Max. Value : 10 A
     (With UL1007 AWG #16 on 2P)
  2. Min. Value : 2 A
     (With UL1007 AWG #26 on 15P)
- Withstanding Voltage : 1,500V AC/minute
- Insulation Resistance : 1,000MΩ min
- Temperature Range : -25 ℃ to + 90℃
- Contact Resistance : 20mΩ max

■ RECEPTACLE (Panel Mount Type)

- Part No. : 2WW2413-XXE
- Poles :
  1. Single Row : 02~04
  2. Matrix Row : 2x2, 06, 09, 12, 15
- Material : Nylon66 UL94V-0
- Mate Part :
  1. Plug : 2WW2413-XX
  2. Terminal : 2WW24131BS-2X
- Packing : Bag

PANEL CUTOUT Dimension(Refer)

Matrix Row

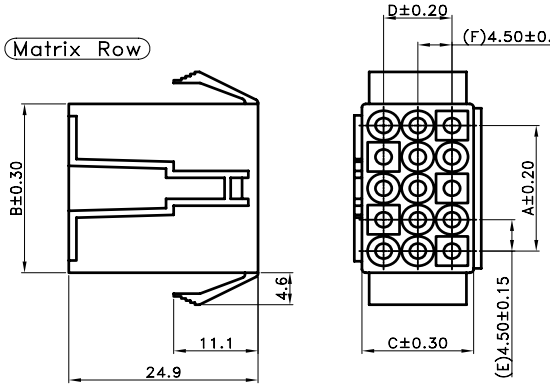

Poles	Dimensions			
	A	B	C	D
2x2	—	10.40	10.20	—
06	9.00	15.00	10.00	
09	9.00	15.00	14.70	9.00
12	13.50	19.60		
15	18.00	24.20		

Single Row

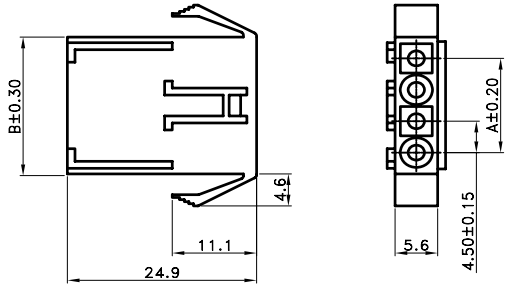

Poles	Dimensions	
	A	B
02	—	10.70
03	9.00	15.00
04	13.50	19.60

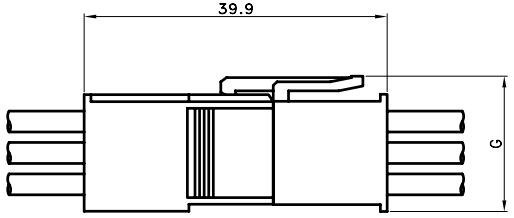

Poles	G
02~04	10.4
2x2	15.2
06	14.9
09,12,15	19.4

Assembled Dimension

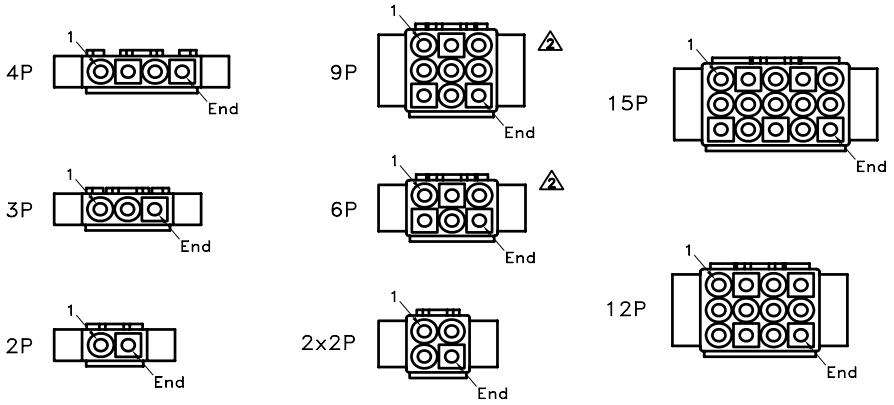

Locations of Circuit

2005/05/15

TOLERANCE		LTR	REVISION RECORD	NAME	DATE	LTR	REVISION RECORD	NAME	DATE
.0	±0.30	1	圖面原因遺失	余秀麗	2005/05/15	8			
.00	±0.20	2	6P & 9P示意圖錯誤訂正	王誠賢	2011/08/05	9			
.000	±0.10	3				10			
ANGLE		4							
0°	±1°	5							
.0°	±	6							
SHEET	1/1	7							

CUSTOMER

Conforms to The RoHS Instruction

Singatron Enterprise Co., Ltd.

TITLE	4.50mm Wire to Wire Power Connector, W/ Ear			
DWN	王誠賢	PART NO.	2WW2413-XXE	
CHKD	王瑞雄	SCALE 1:1	UNIT: mm	
APVD	張育瑞	SIZE: A3	SHEET:1 OF 1	REV: a2

CUSTOMER COPY