REV.	ECN NO OR DESCRIPTION	REVISED	DATE
A	INITIAL RELEASE	CHRIS	01/03'11
B	MODIFY PRODUCT STRUCTURE	CHRIS	06/09'11

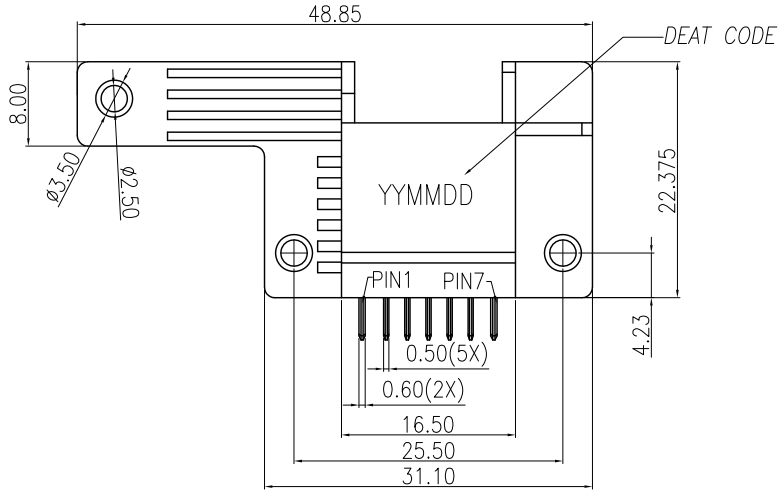

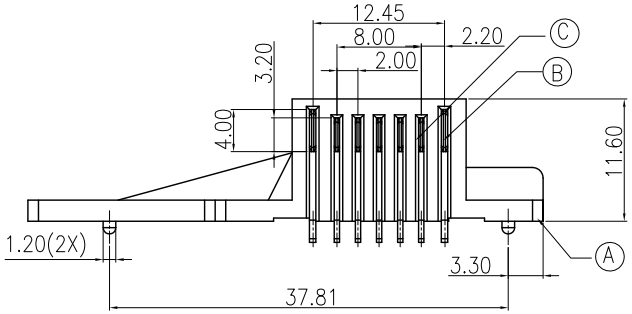

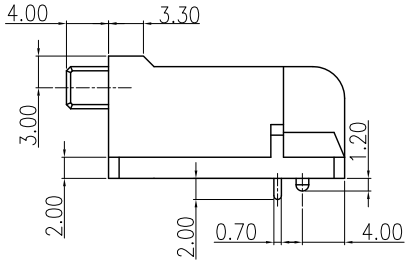

SPECIFICATIONS:

1. ELECTRICAL CHARACTERISTICS:
   1-1. RATING: 30V, 7A Max.
   1-2. CONTACT RESISTANCE:
   30 MILLIOHMS Max. FOR INITIAL,
   50 MILLIOHMS Max. AFTER 5000 CYCLES.
   1-3. INSULATION RESISTANCE: 100 MEGAOHMS Min.
   BY 500V DC AFTER 1 MINUTE.
   1-4. DIELECTRIC WITHSTANDING VOLTAGE: 500V RMS AFTER 1 MINUTE.
2. MECHANICAL CHARACTERISTICS:
   2-1. INSERTION FORCE : 0.18~1.5KGF
   2-2. WITHDRAWAL FORCE : 0.15~1.2 KGF
3. LIFE TEST: 5,000 CYCLES MIN.
4. TEMPERATURE RANGE:-20~+85°C
5. OTHER GENERAL SPEC. TO REFER "2BA2YXX SERIES SPEC".
6. TO CONFORM TO SINGATRON HAZARDOUS SUBSTANCE FREE SPEC.
7. HALOGEN FREE PRODUCT IDENTIFICATION LABEL ON PACKAGING:
8. PACKING: TRAY
9. PRINTED DATE CODE" YYMMDD " ON TOP OF CONNECTOR.
   YYMMDD
   DD: DAY
   MM: MONTH
   YY: YEAR
10. PART NO: 2BA2Y02 - 000 1 1 1 F
   PLATING: 1.GOLD FLASH
   COLOR: 1:BLACK
   HALOGEN FREE
   PACKAGING: 1.TRAY

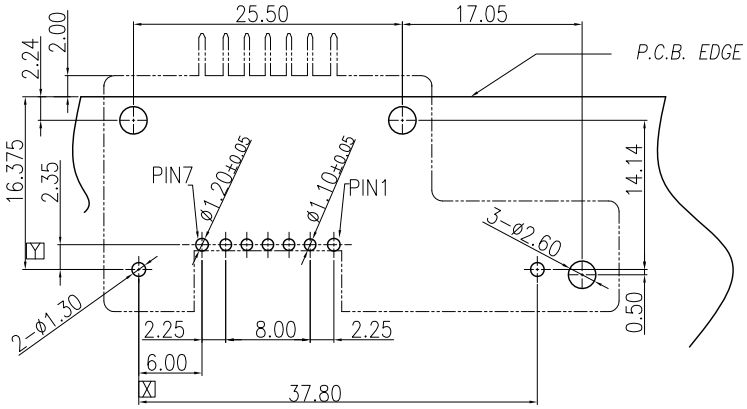

RECOMMENDED P.C.B. LAYOUT
TOP VIEW (TOLRANCE: ±0.05)

NO	DESCRIPTION	QTY	MATERIAL	PLATING & COLOR
C	TERMINAL(+)	5	C2680R-H T=0.5 mm	GOLD FLASH
B	TERMINAL(-)	2	C2680R-H T= 0.6mm	GOLD FLASH
A	HOUSING	1	LCP THERMOPLASTIC UL 94V-0	BLACK COLOR

UNLESS OTHERWISE SPECIFED TOLERANCES

DECIMALS: X :±0.5, X.X :±0.3, X.XX :±0.2
ANGLES: X :±2°, X.X :±1°

Singatron Enterprise Co., Ltd.
信音企業股份有限公司

TITLE	2.0mm PITCH 7P BATTERY CONN		
DWN	CHRIS 06/09'11	PART NO. 2BA2Y02-000111F	
CHKD	TEERY 06/09'11	SCALE 1:1	UNIT: mm
APVD	SCEAN 06/09'11	SIZE: A4	SHEET: 1OF1	REV: B

CUSTOMER COPY

文件編號 RD-06-043-A