REV.	ECN NO OR DESCRIPTION	REVISED	DATE
A	PDR NO: T100614-3A	BOYE.QI	2011.01.05
B	ECN NO: S110403	ANDY	2011.04.28
C	ECN NO: S110626	SEAN	2011.11.30

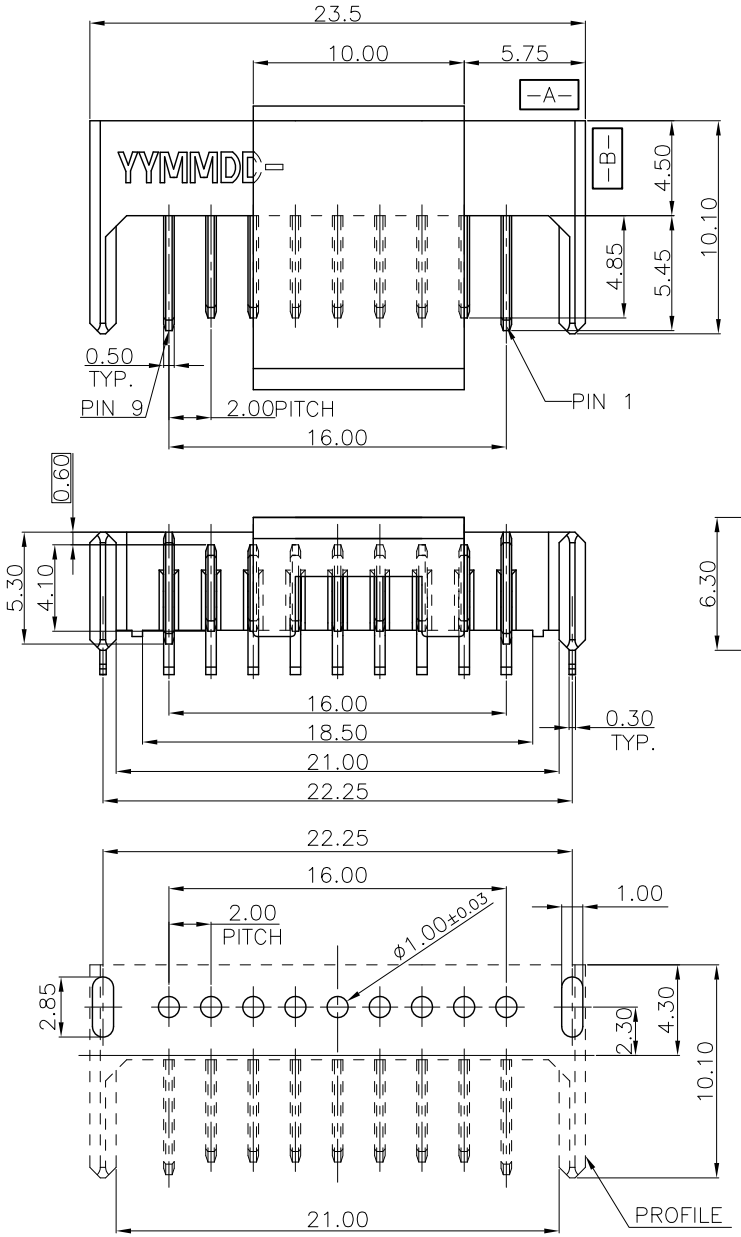

RECOMMENDED P.C.B LAYOUT(TOP VIEW)

TOLERANCE ±0.05mm(T=1.20mm)

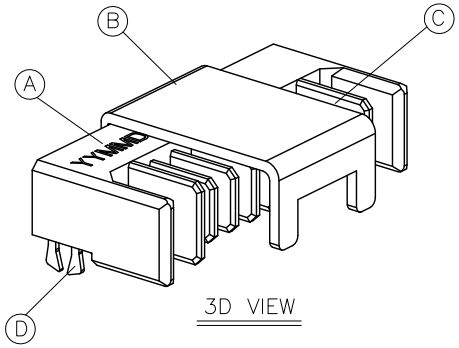

3D VIEW

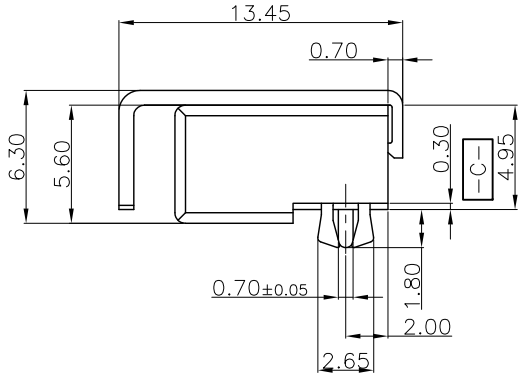

NOTES:

1. ELECTRICAL PERFORMANCES:
   1.1 CONTACT RESISTANCE: 20 mΩ MAX.
   1.2 INSULATION RESISTANCE: 1000 MΩ MIN.
   1.3 DIELECTRIC WITHS TANDING VOLTAGE: 500V AC FOR 1 MINUTE.
2. PERFORMANCE:
   2.1 VOLTAGE RATING: 30V DC.
   2.2 CURRENT RATING: 7.0Amps MAX.PER CONTACT.
   2.3 OPERATING TEMPERAQTURE: −45°C TO +80°C.
3. MECHANICAL PERFORMANCES:
   2.1 RETENTION FORCE: 3.0N PER PIN.
   2.2 DURABILITY: 5000 CYCLES.
4. HALOGEN FREE PRODUCT IDENTIFICATION MARK ON JACK:
5. HALOGEN FREE PRODUCT IDENTIFICATION LABEL ON PACKAGING:
6. PRINTED DATE CODE" YYMMDD " ON TOP OF CONNECTOR.

DATE CODE: YYMMDD
- DD: DAY
- MM: MONTH
- YY: YEAR

NO	DESCRIPTION	QTY	MATERIAL	PLATING & COLOR
D	LOCK	2	S50C,T=0.30	Sn 120u" OVER Ni 50u"
C	TERMINAL	9	BRASS,T=0.50±0.02	GOLD FLASH ON CONTACT AREA Sn 120u" ON SOLDIER TAIL AREA All OVER Ni 50u"
B	COVER	1	HIGH TEMPERATURE THERMOPLASTIC,UL 94V-0	BLACK
A	BODY	1	HIGH TEMPERATURE THERMOPLASTIC,UL 94V-0	BLACK

UNLESS OTHERWISE SPECIFED TOLERANCES

DECIMALS: X :±0.5, X.X :±0.3, X.XX :±0.2

ANGLES: X :±2°, X.X :±1°

Singatron Enterprise Co., Ltd.
信音企業股份有限公司

TITLE	BATTERY CONN. MALE , DIP			
DWN	SEAN	PART NO. 2BA3015-031111		
CHKD	TOM	SCALE:5:1	UNIT: mm	
APVD	TONY	SIZE: A3	SHEET:1 OF 1	REV:C

CUSTOMER COPY

文件編號 RD-06-043-A