REV.	ECN NO OR DESCRIPTION	REVISED	DATE
A	PRODUCT RELEASE	LIAO	2007.10.04

SPECIFICATIONS:

1. ELECTRICAL CHARACTERISTICS:
   - 1-1.RATING: 12V 1A
   - 1-2. CONTACT RESISTANCE: 30mΩMAX(BEFORE).
   - 1-3. DIELECTRIC VOLTAGE WITHSTAND: 500V AC FOR ONE MINUTE
   - 1-4. INSULATION RESISTANCE: 100MΩ MIN. MEASURED BY 500 VDC
2. MECHANICAL CHARACTERISTICS:
   - 2-1. INSERTED FORCE : 3.5 KGS MAX.
   - 2-2. WITHDRAWAL FORCE : 0.3~4.0 KGS
3. LIFE TEST: 5,000 CYCLES MIN.
4. PACKING: TAPE & REEL
5. TO CONFORM TO THE "SE-01-001" & "ROHS DIRECTIVE"
6. GREEN PRODUCT IDENTIFICATION MARK IN JACK: △
7. GREEN PRODUCT IDENTIFICATION LABEL IN PACKING: G.P. PASS
8. FOR LEAD-FREE PROCESS.

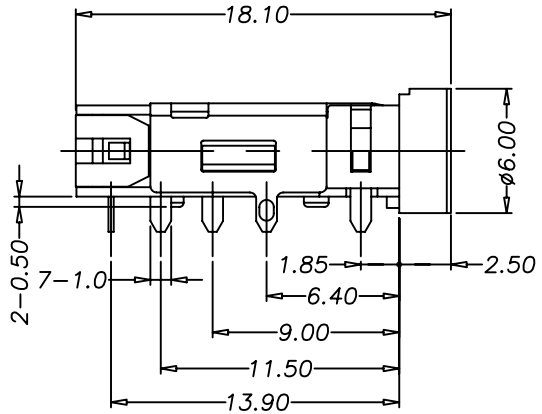

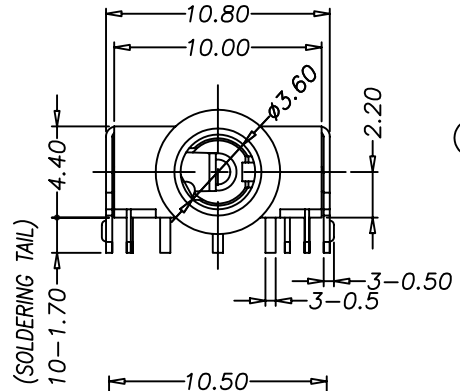

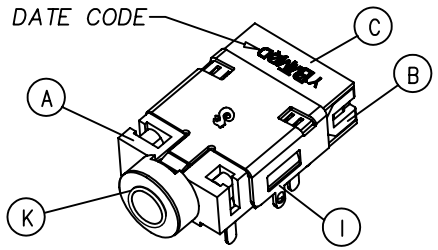

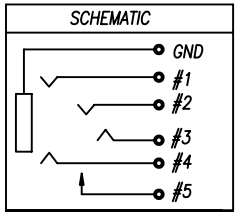

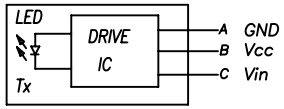

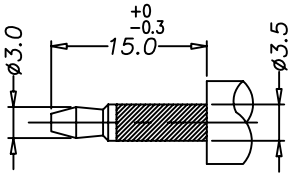

OPTICAL FIBRE PLUG

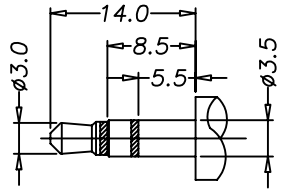

ø3.5 3POLE STANDARD PLUG

RECOMMEND MATING PLUG

1/2 SCALE

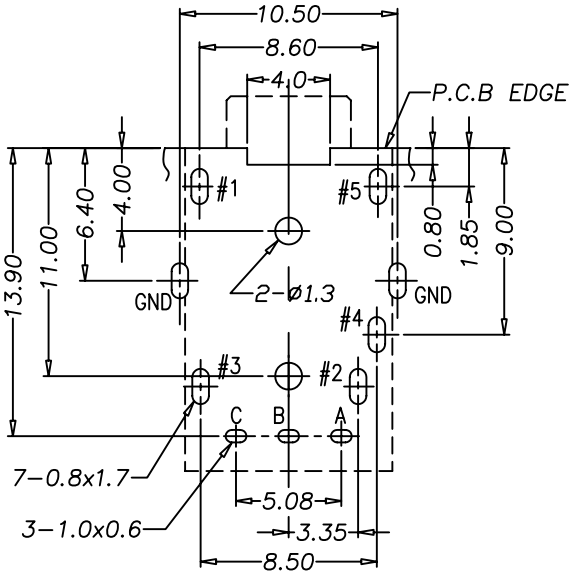

RECOMMENDED PCB LAYOUT

SOLDER SIDE

(TOLERANCE: ±0.05)

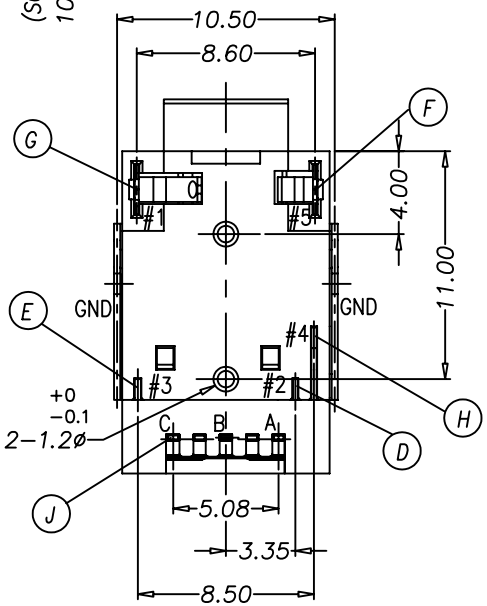

NO	DESCRIPTION	QTY	MATERIAL	PLATING & COLOR
K	METAL	1	BRASS	GOLD FLASH
J	IC DRIVE	1	EPOXY/CDA-C19400	TIN PLATING (Lead-Free)
I	SHIELDING	1	BRASS	NICKEL PLATING
H	EARTH SPRING-A	1	PHOSPHOR BRONZE	GOLD FLASH
G	EARTH SPRING-B	1	PHOSPHOR BRONZE	GOLD FLASH
F	EARTH TERMINAL	1	PHOSPHOR BRONZE	GOLD FLASH
E	TIP SPRING	1	PHOSPHOR BRONZE	GOLD FLASH
D	RING SPRING	1	PHOSPHOR BRONZE	GOLD FLASH
C	CASE	1	HIGH TEMP THERMOPLASTIC UL 94V-0	BLACK COLOR
B	COVER	1	HIGH TEMP THERMOPLASTIC UL 94V-0	BLACK COLOR
A	BODY	1	HIGH TEMP THERMOPLASTIC UL 94V-0	BLACK COLOR

UNLESS OTHERWISE SPECIFED TOLERANCES

DECIMALS: X :±0.5, X.X :±0.3, X.XX :±0.2

ANGLES: X :±2°, X.X :±1°

Singatron Enterprise Co., Ltd.
信音企業股份有限公司

TITLE	ø3.5 PHONE JACK (WITH IC)		
DWN	LIAO 2007.10.4	PART NO. 2SJ-C373-B03	
CHKD	ANGELA 2007.10.4	SCALE: 4/1	UNIT: mm
APVD	ANGELA 2007.10.4	SIZE: A3	SHEET:1 OF 1	REV: A

CUSTOMER COPY

文件編號 RD-06-035-1A